KINDRED

KSDU/9

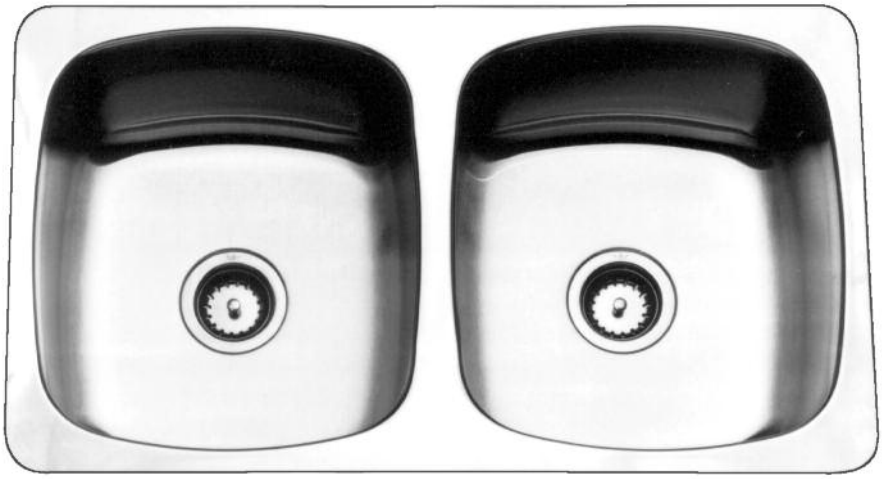

Certified

Optional Accessories

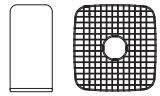

MB100 BG50S

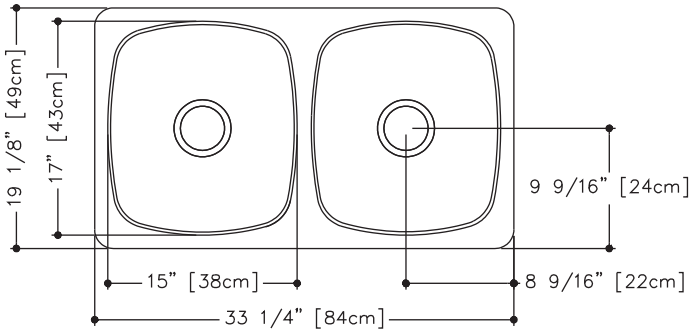

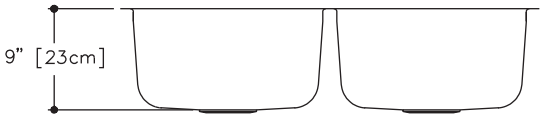

KSDU/9 SPECIFICATION

Model KSDU/9 is a double (two equal size) bowl undermount sink manufactured for Franke Kindred Canada Limited from 18 gauge, 18-10 stainless steel. Product has a silk finished rim and radiant silk finished bowls. Sink is fully undercoated. Basket strainer waste fittings (3 1/2", 89 mm), template, and installation kit are included. Sink is backed with a limited buyer lifetime warranty.

- O.D. 19 1/8 " x 33 1/4" x 9" (49 x 84 x 23 cm)
- **Recommended for minimum 39" cabinet**
  (additional cabinet space is required to accommodate the Kindred installation kit)

FUN# 122.0045.007

Franke Kindred Canada Limited
P.O. Box 190, 1000 Kindred Road, Midland, Ontario, Canada, L4R 4K9 Phone: 866-687-7465 Fax: 800-361-8408

Plumbing Fixture / Kitchen Sinks 15410

Franke Kindred Canada Limited Printed in Canada 61558 0309